LOBERON

COMING HOME

15 min

2
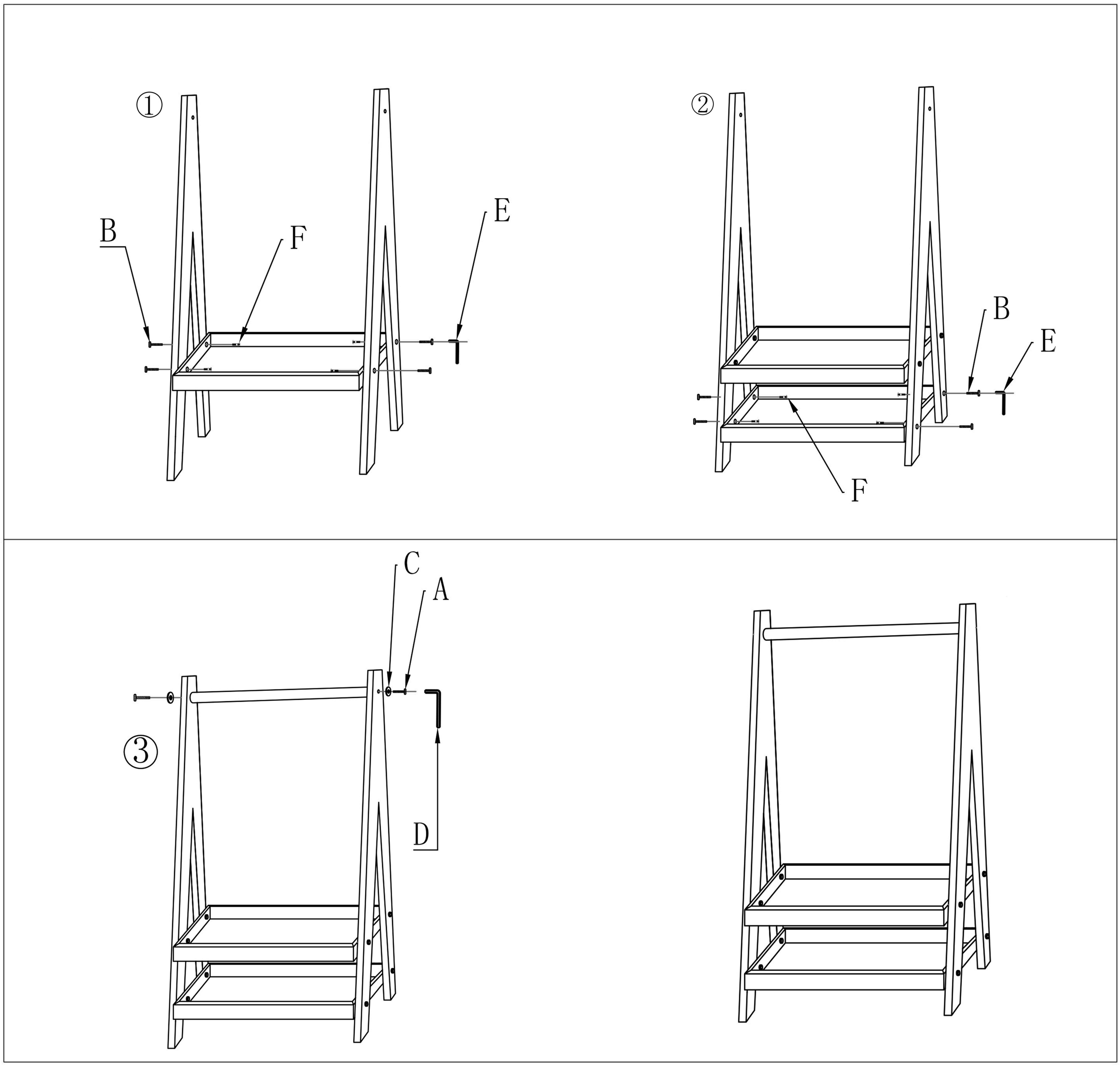
AX2	BX8	CX2	DX1	EX1	FX8
⌀ 8*40mm	⌀ 6*30mm	⌀ 8	M8	M6	⌀ 8*25mm