LOBERON

COMING HOME

15 min

1

AX8	BX1	CX8
ϕ8x50mm		ϕ8

1

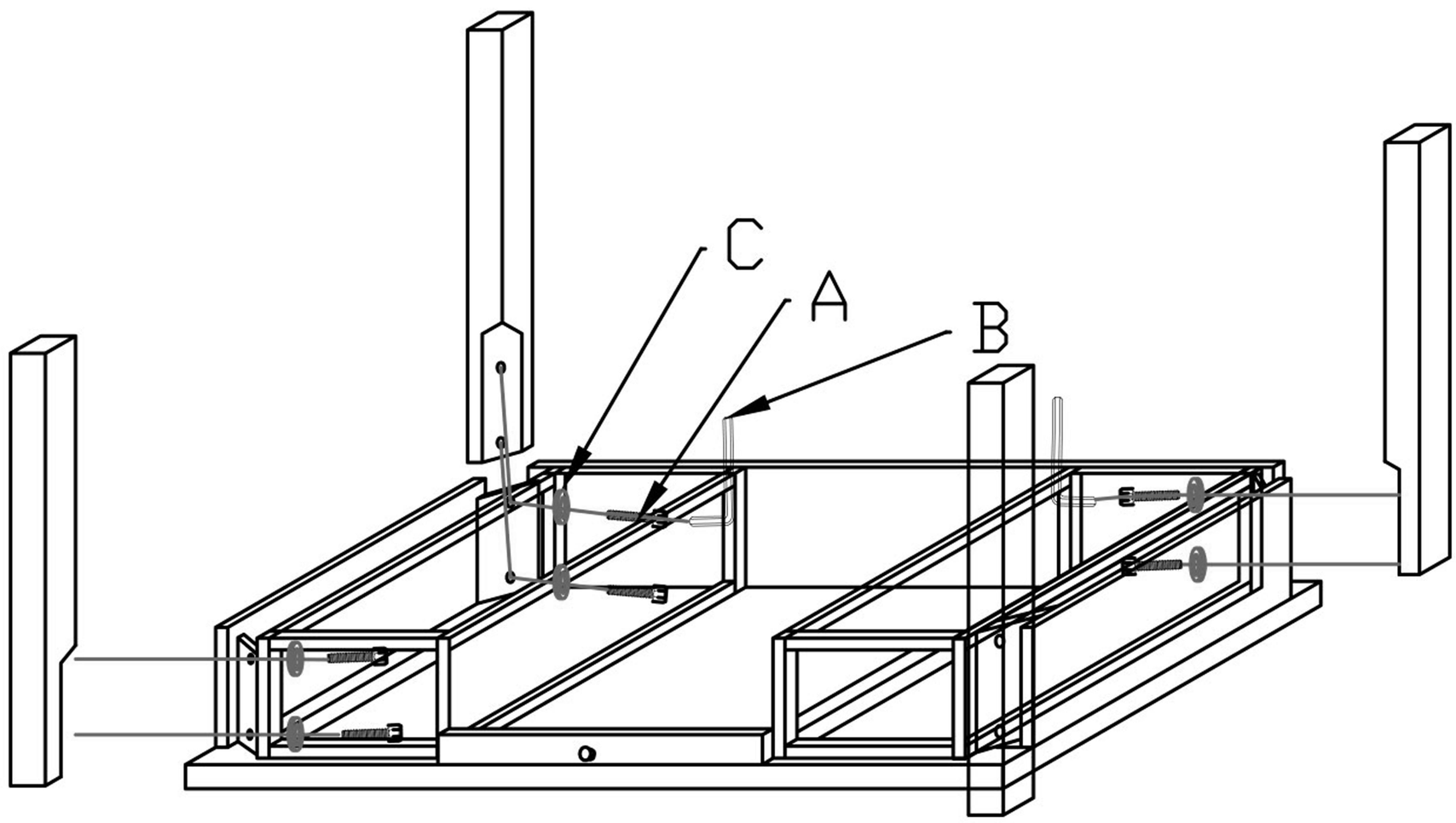
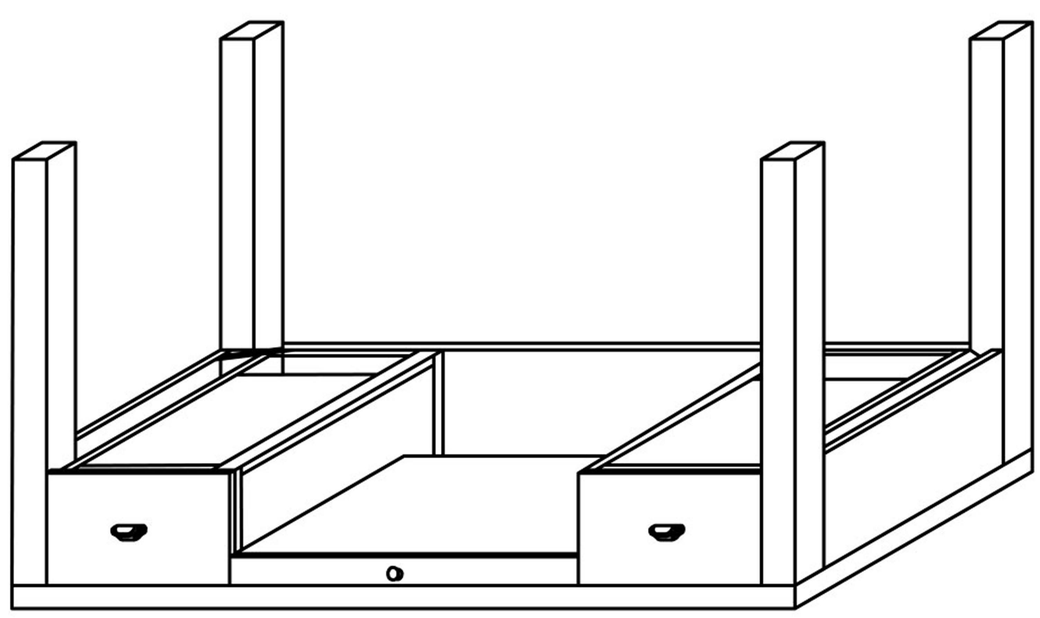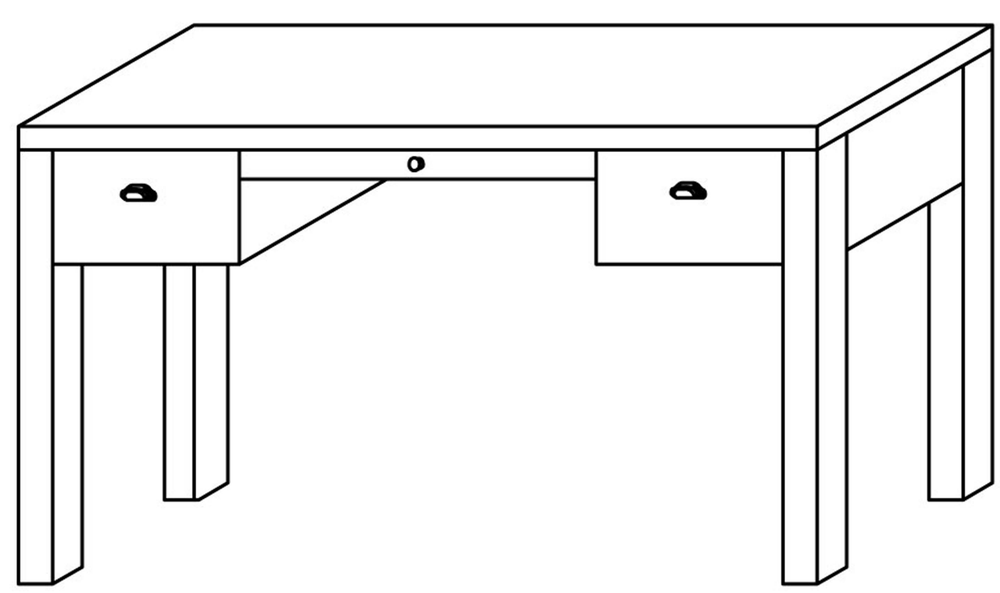
2