LOBERON

COMING HOME

5 min

1

A x 3	B x 3	C x 1
5x60mm		

1

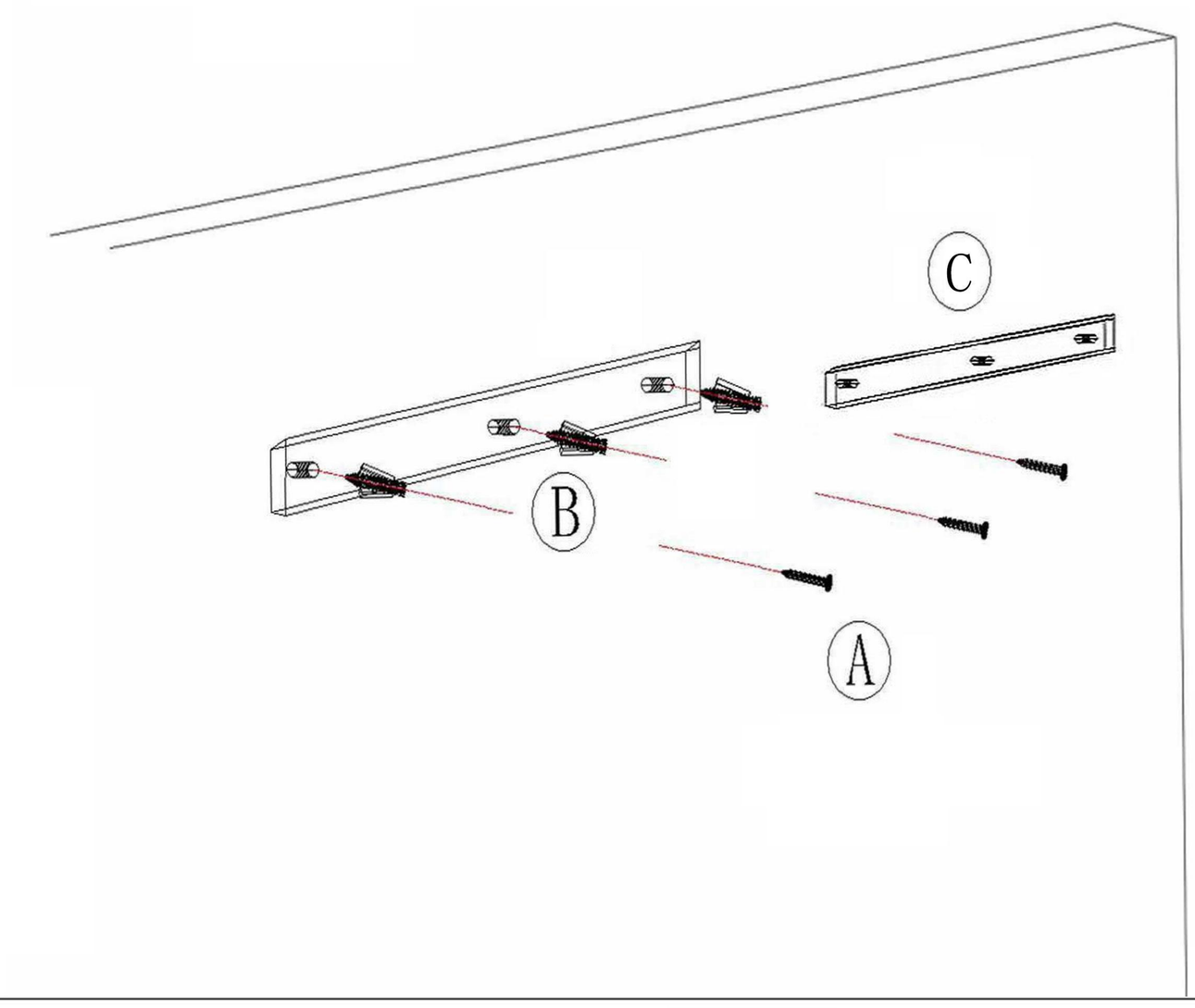
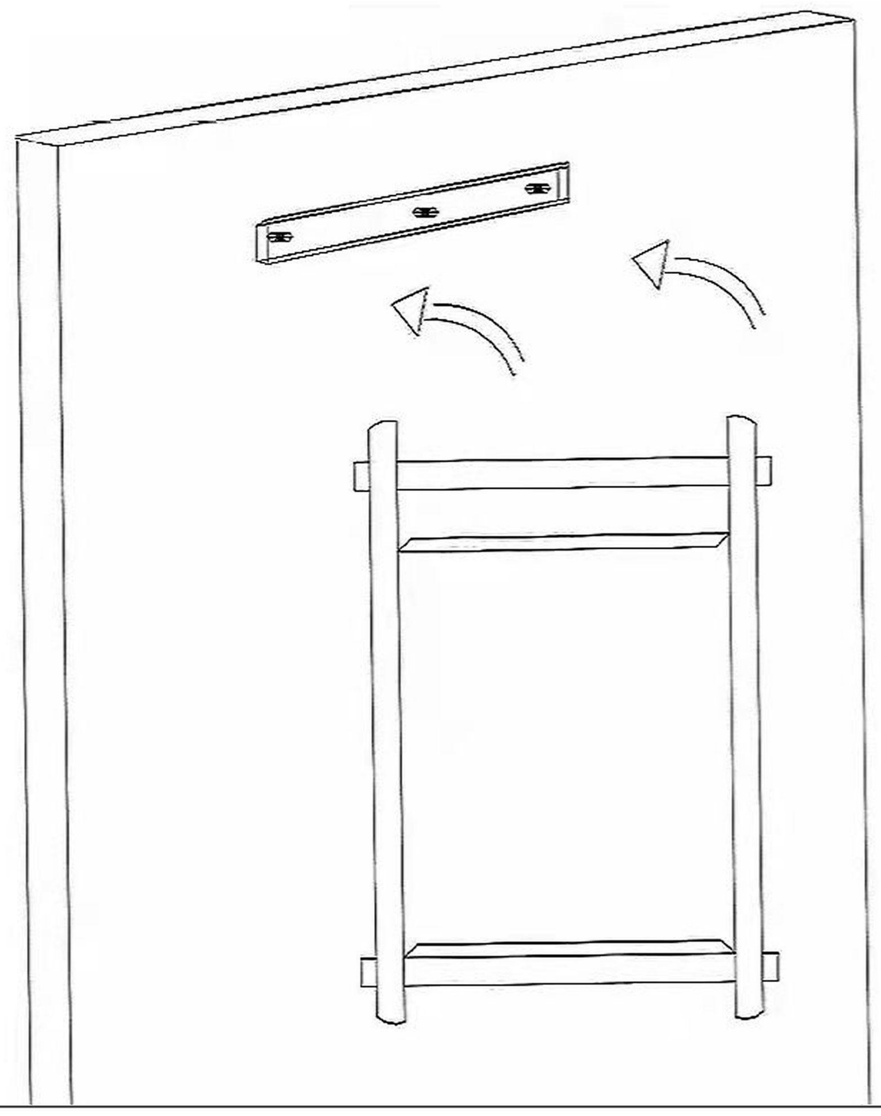
2