LOBERON

COMING HOME

20 min

2

Ax1	Bx2	Cx2	Dx2	Ex1	Fx26	Gx10	Hx2
					Ø8mmX57mm	Ø8mmX114mm	Ø8mmX38mm
					Ix38 Ø8mmX19mm	Jx1 M5mmX67mm	

1

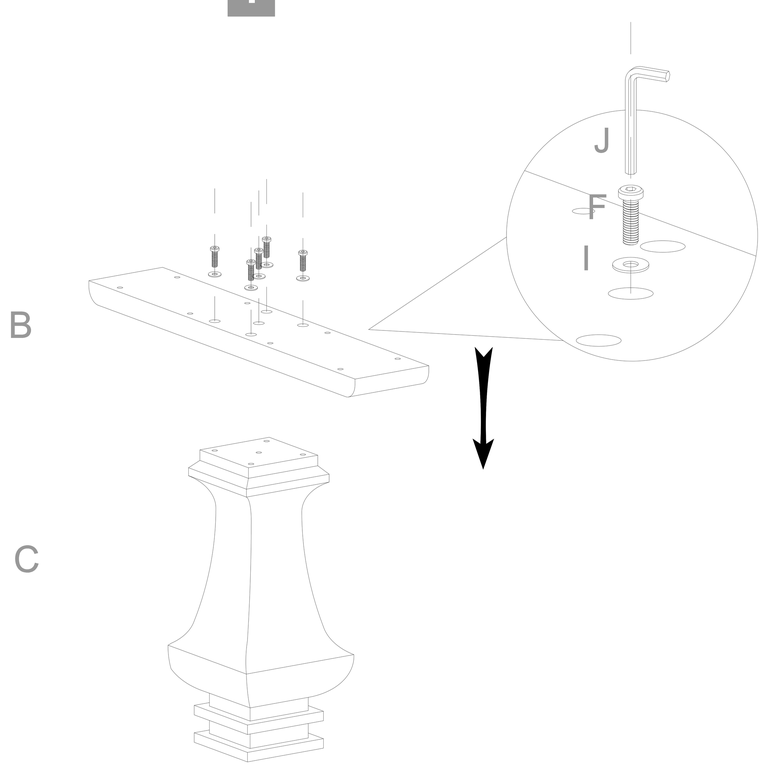

2

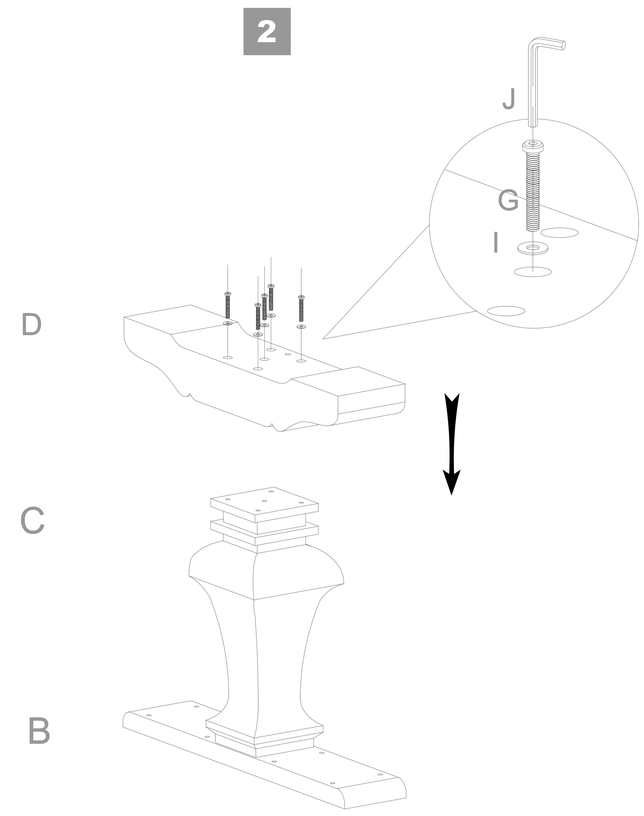

3

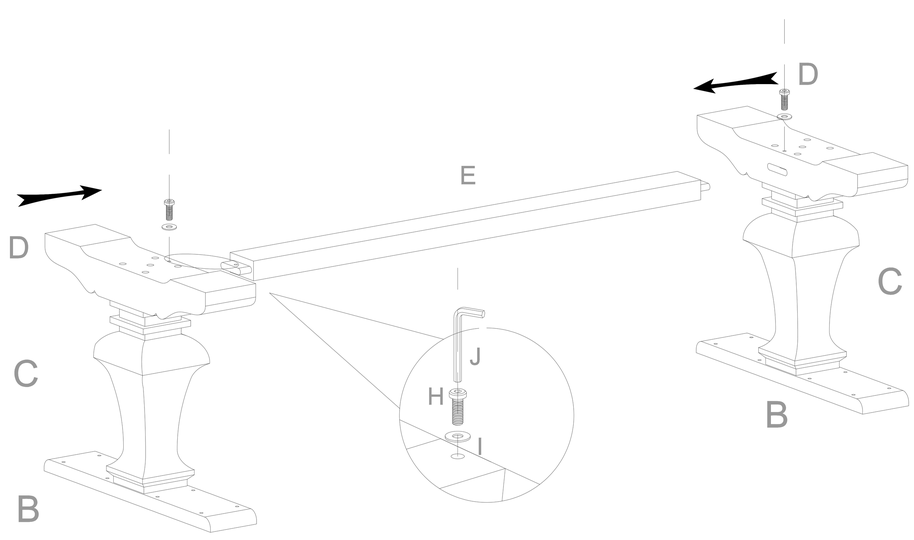

4

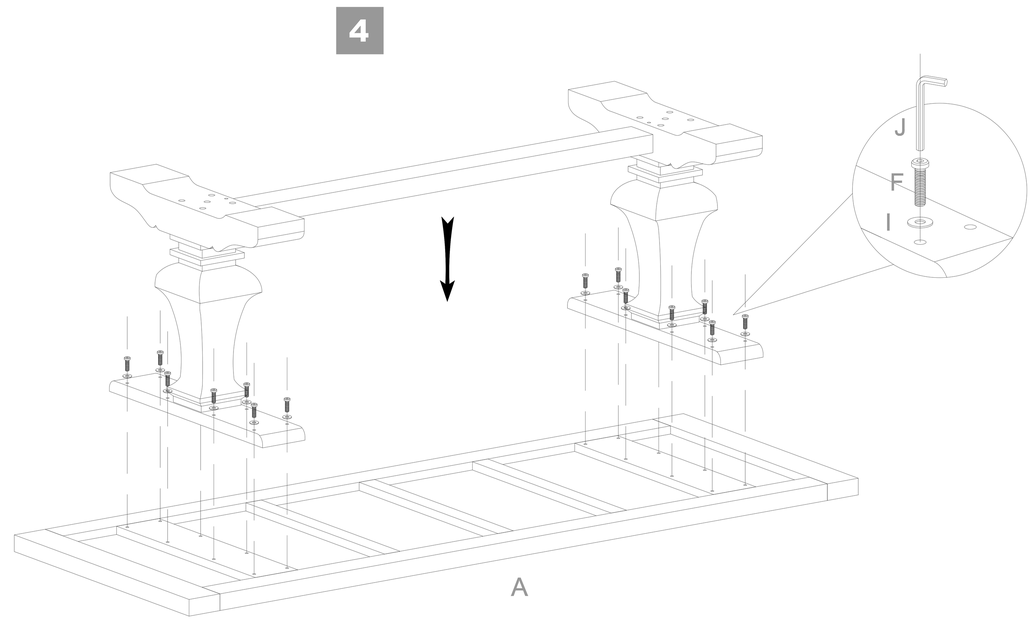
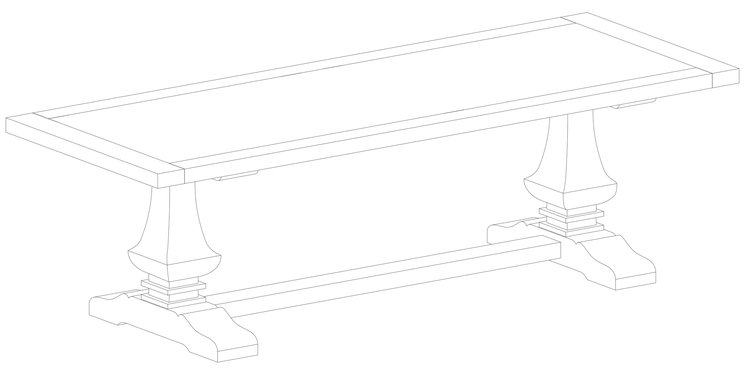
5