LOBERON

COMING HOME

15 min

2

AX24	BX24	CX1
ϕ8X35mm	ϕ8X22mm	

1

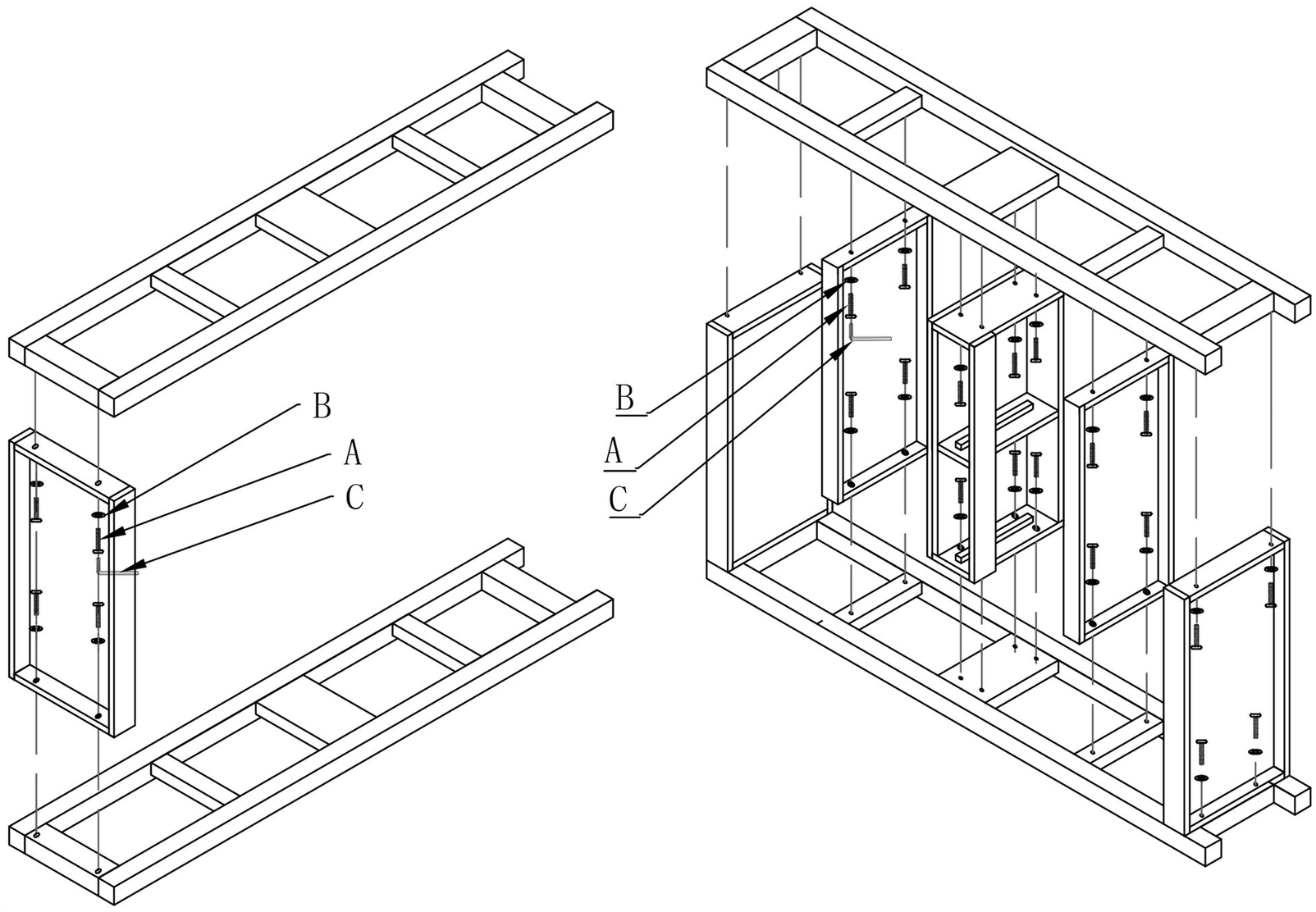
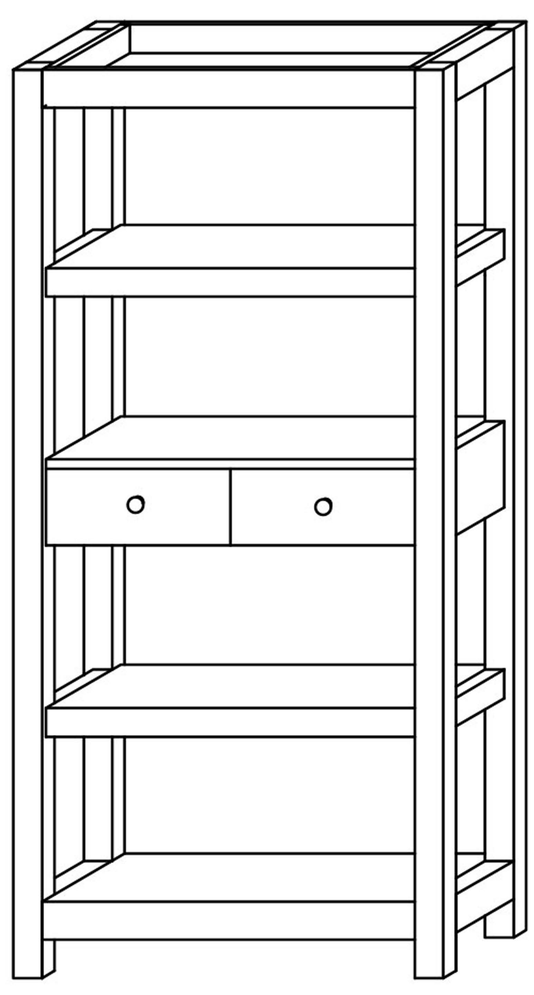
2