LOBERON
COMING HOME

20 min

2

Ax1	Bx2	Cx1	Dx1

1

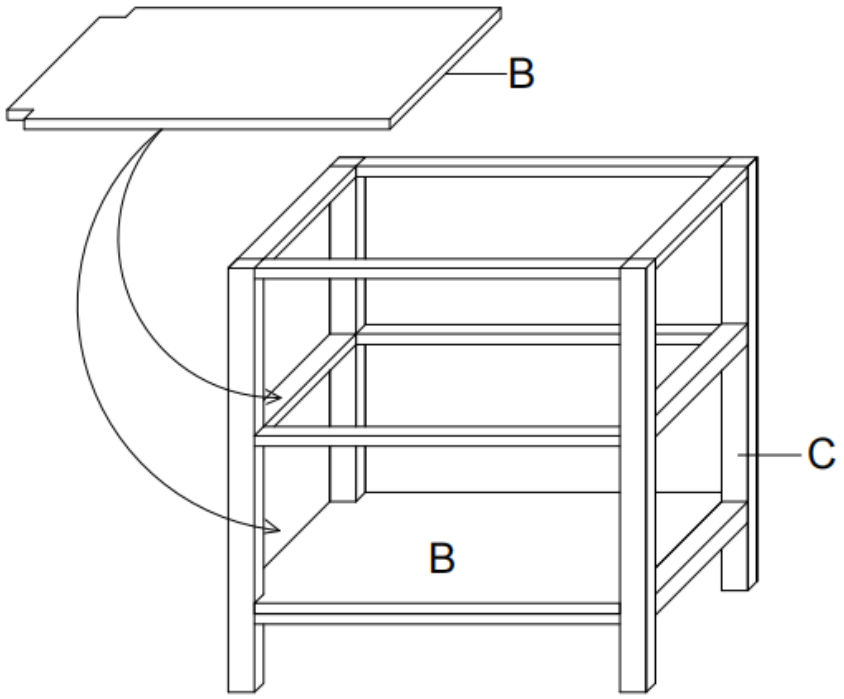

LOBERON
COMING HOME
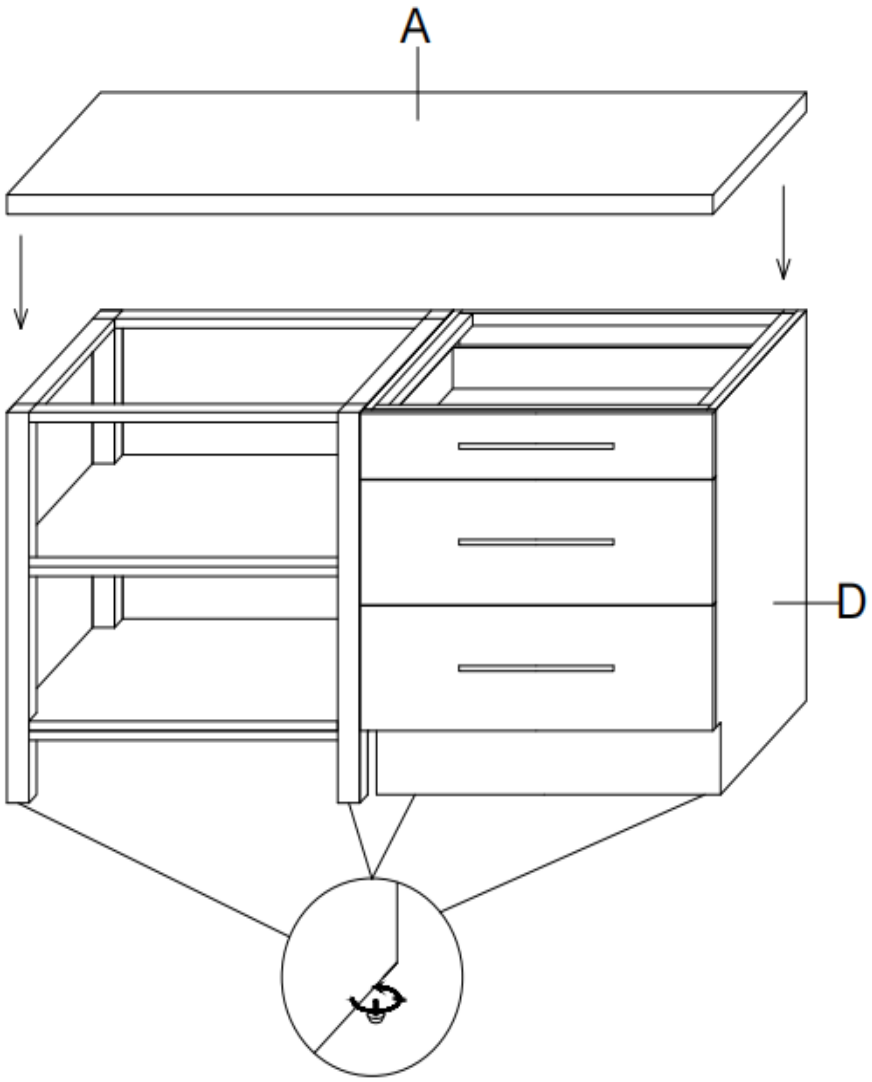
2